GÜDEL

180 High-precision planetary gearbox

Four types for maximum efficiency and movement accuracy

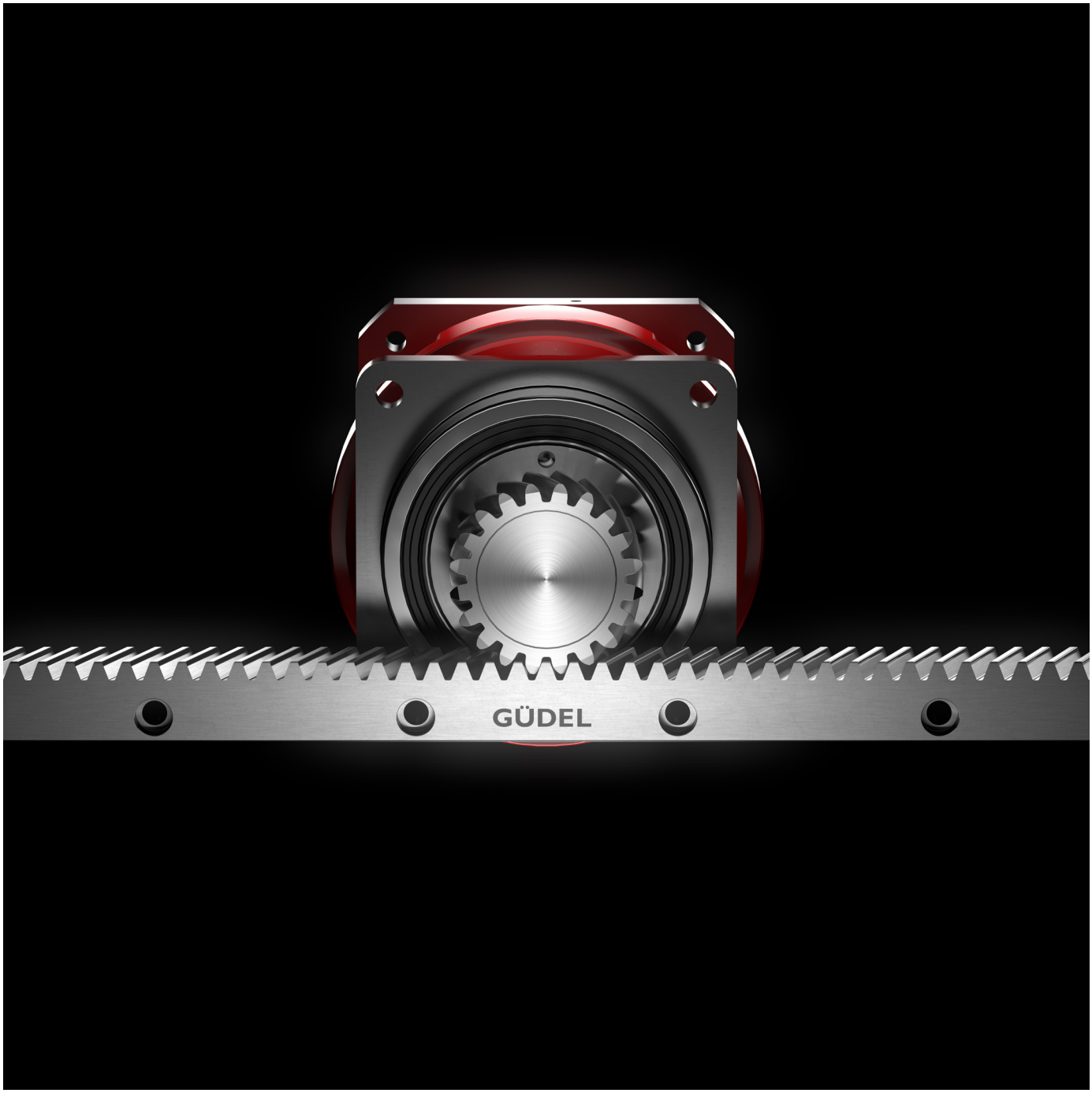

The benchmark for maximum precision

With the Güdel high-precision planetary gearboxes in size 180, we offer a compact product for all requirements: flexibly combinable, efficient in operation and immediately available. Developed for very high loads, long service life and maximum system integration.

Automation solutions since 1954 – Güdel stands for Swiss industrial expertise and worldwide system integration.

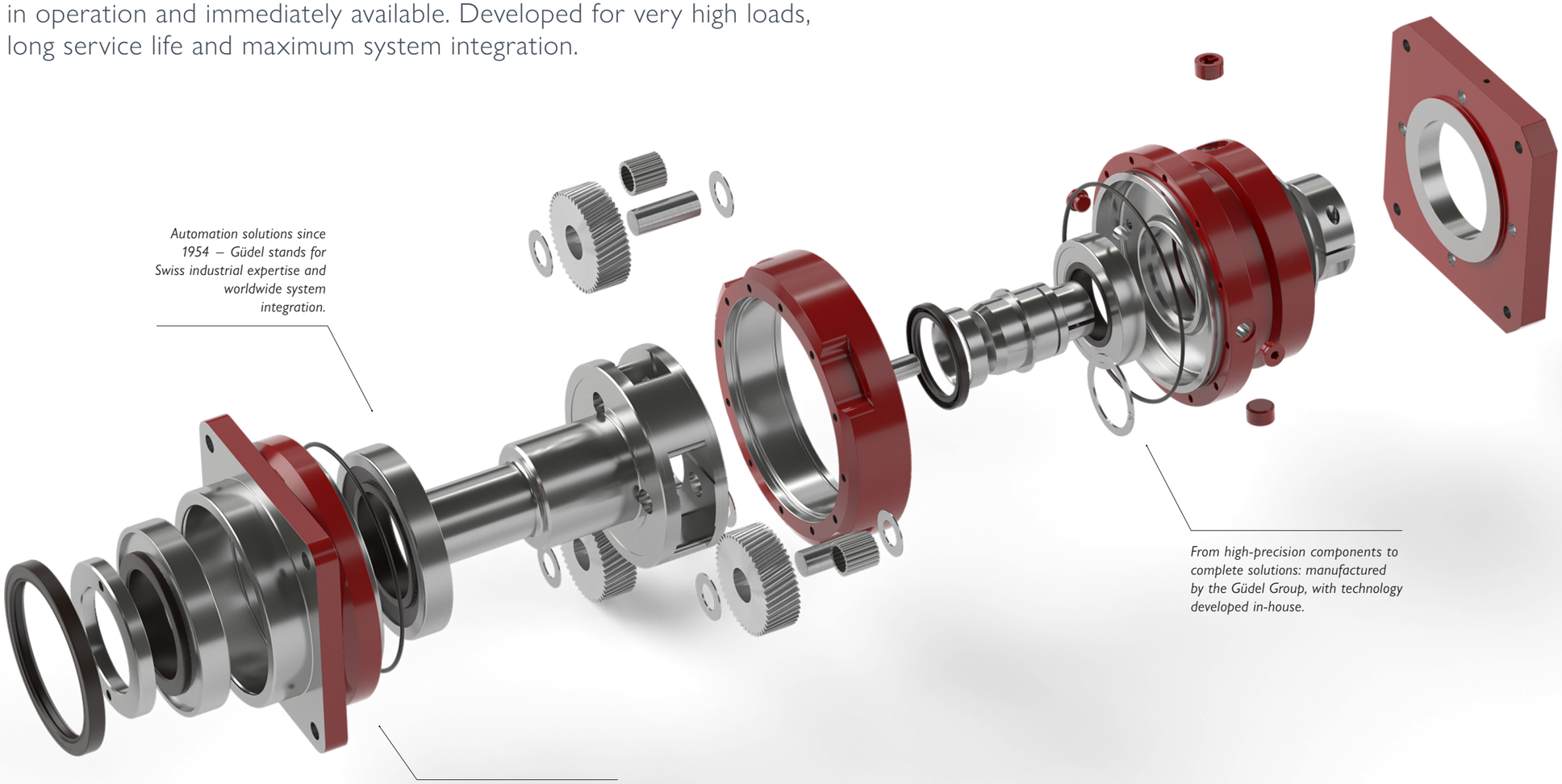

From high-precision components to complete solutions: manufactured by the Güdel Group, with technology developed in-house.

Only a Güdel planetary gearbox in typical red is an original.

The 180 high-performance planetary gearbox portfolio from Güdel offers four well-designed types for a wide range of requirements. The Güdel Product Finder helps you select the right gear rack – tailored to application, module, length, quality, or toothing. This ensures that planetary gearbox and gear rack are perfectly matched. Suitable pinions are automatically suggested.

Scan QR code and find gearbox.

Four types – depending on requirements

NRH / NRHP
The versatile and precise NRH and NRHP high-power planetary gearboxes impress with their high flexibility and high-precision. Ideal for applications with high speeds, fast cycles and precision-critical processes.

SRH / SRHP
The compact SRH and SRHP high-performance planetary gearboxes offer maximum power density with high rigidity. Developed for tight installation spaces and sophisticated machine concepts with the highest demands on torque and load capacity.

Performance compared to the Market standard

The graph shows the average nominal and acceleration torques (T2N/T2B) of the four Güdel types NRH, NRHP, SRH and SRHP in comparison to customary values in the industry.

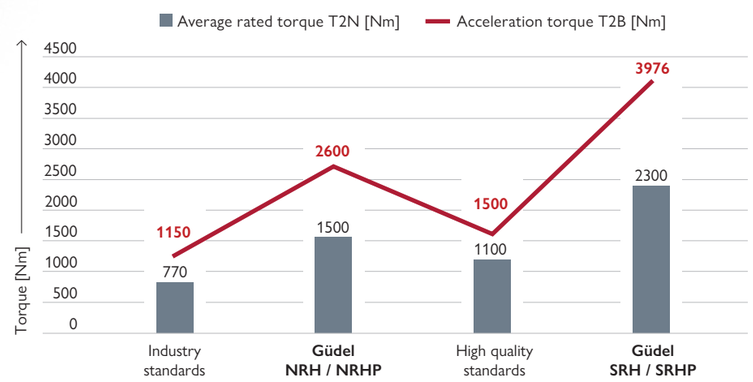

For each solution a gearbox

Four types – developed for different requirements and designed as an integrable component of high-performance drive systems.

Güdel planetary gearbox NRH180 with pinion

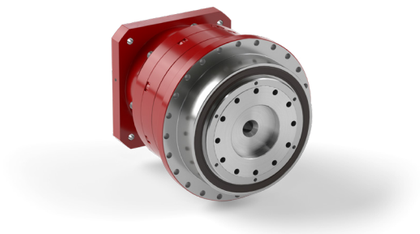

Güdel planetary gearbox NRHP180 with flange

Type NRH

Powerful and solution-oriented

The Güdel NRH planetary gearbox with optimized helical gearing impresses with its modular design and versatility. Whether in mechanical engineering, printing, packaging or robotics – the Güdel NRH delivers dynamic performance at high speeds and accelerations. Developed for demanding applications in which production flow and precision must fit together seamlessly.

Your advantage: adaptability meets precision – in a robust drive system.

Type SRH

Maximum performance in minimal space

When space is limited but requirements are high, the Güdel SRH planetary gearbox delivers impressive power density in a compact design. Ideal for applications where standard solutions reach their limits – the Güdel SRH gearbox provide maximum torque in minimum space.

Your advantage: compact, high power density and suitable for tight installation situations.

Type NRHP

Precision with high rigidity

The Güdel NRHP planetary gearbox impresses with its high torsional and tilting rigidity, making it ideal for precision-critical processes. The helical gearing ensures optimum force distribution – perfect for automation, metrology or robotic applications where accuracy is crucial.

Your advantage: maximum precision – even under the most demanding conditions.

Type SRHP

Maximum power density and stability

The Güdel SRHP planetary gearbox combines state-of-the-art technology with a reinforced flange for maximum power density, high rigidity and torque – with minimum installation space. Suitable for demanding applications with high-precision and highest loads and quality requirements.

Your advantage: maximum performance in the smallest of spaces.

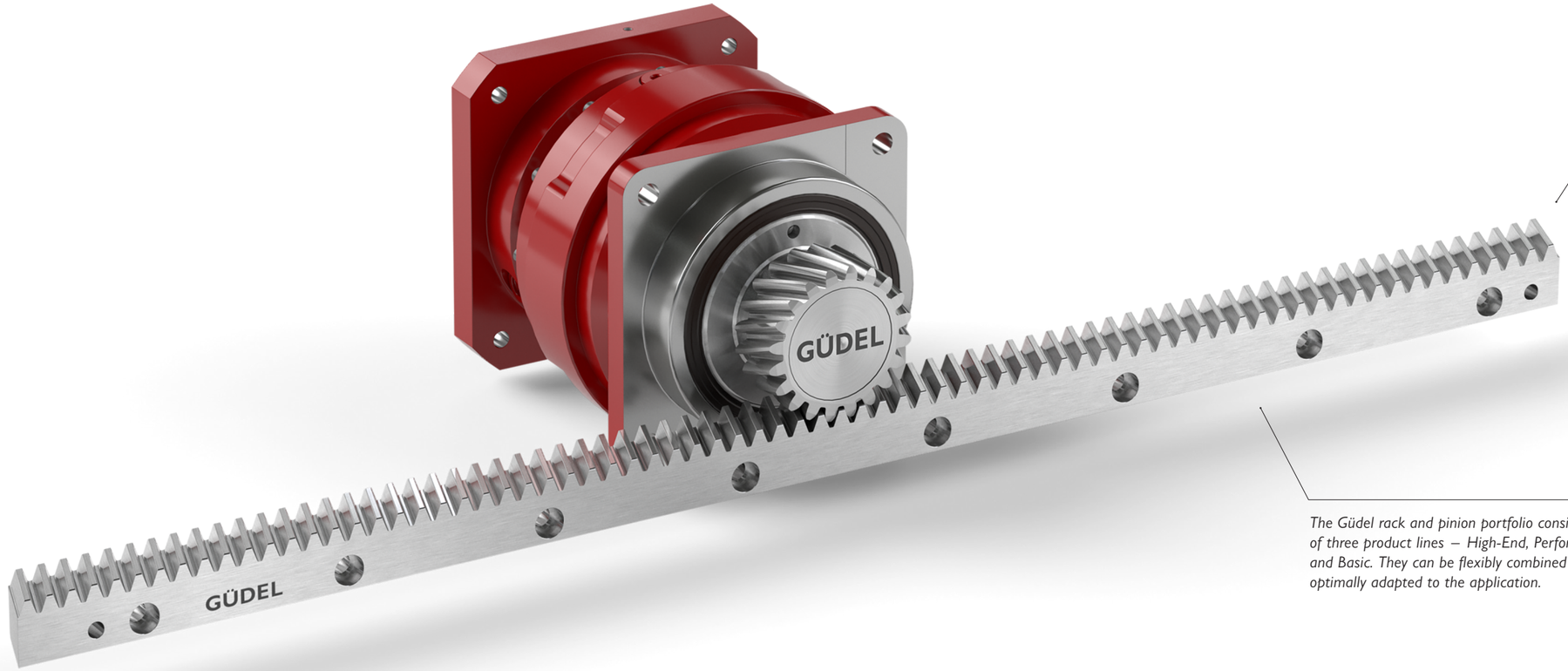

Güdel gearboxes, racks and pinions fit together perfectly – for maximum performance, repeat accuracy and a long service life.

The Güdel rack and pinion portfolio consists of three product lines – High-End, Performance and Basic. They can be flexibly combined and optimally adapted to the application.

Scan the QR code and find the perfect rack.

NRH planetary gearbox 180 | 3-stage | *Powerful and solution-oriented*

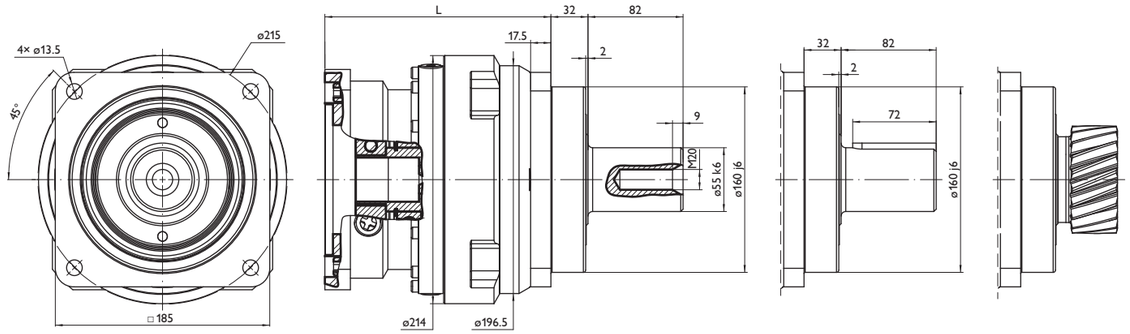

Type NRH: Dimensions for the corresponding output variants

Size 180			1-stage				2-stage										3-stage
Available ratio*	i	unit	4	5	7	10	16	20	25	28	35	40	49	50	70	100	
Nominal torque S5 a)	T_{2N}	[Nm]	1401	1614	1281	798	1625	1625	1614	1625	1614	1625	1281	1614	1281	798	
Acceleration torque S5 b)	T_{2B}	[Nm]	2242	2583	2049	1277	2600	2600	2583	2600	2583	2600	2049	2583	2049	1277	
Nominal input speed S5 c)	n_{1N}	[rpm]	1500	1600	2200	2200	2600	2600	2700	3000	3000	3000	3000	3000	3000	3000	
Maximum input speed S5	n_{1max}	[rpm]	4500	4500	4500	4500	4500	4500	4500	4500	4500	4500	4500	4500	4500	4500	
Nominal torque S1 a)	T_{2N}	[Nm]	1191	1372	1089	678	1463	1463	1453	1463	1453	1463	1153	1453	1153	718	
Acceleration torque S1 b)	T_{2B}	[Nm]	2242	2583	2049	1277	2600	2600	2583	2600	2583	2600	2049	2583	2049	1277	Ratio in 3 stage available on request: 64, 80, 100, 112, 125, 140, 154, 160, 175, 200, 245, 250, 280, 343, 350, 400, 490, 500, 700, 1000
Nominal input speed S1 c)	n_{1N}	[rpm]	1350	1440	1980	1980	2340	2340	2430	2700	2700	2700	2700	2700	2700	2700	
Maximum input speed S1	n_{1max}	[rpm]	4050	4050	4050	4050	4050	4050	4050	4050	4050	4050	4050	4050	4050	4050	
Emergency stop torque d)	T_{2not}	[Nm]	4484	5166	4098	2554	5200	5200	5166	5200	5166	5200	4098	5166	4098	2554	
Efficiency	η	[%]	96														
Lifetime	L_h	[h]	>20000														
Weight	M	[kg]	33				41										
Angular backlash	j_t	[arcmin]	P1≤1min; P3≤3min ; P5≤5min														
Torsionnal rigidity e)	C_{t2}	[Nm/arcmin]	786	736	662	610	453	437	435	420	411	411	398	392	378	376	
Noise i)	L_{pA}	[dB(A)]	<60														
Max. permitted housing temperature g)	T	[°C]	90														
Protection class			IP65														
Direction of rotation			Same way Input/Output														
Max. radial force on output shaft f)	F_{rmax}	[N]	18000														
Max. axial force on output shaft f)	F_{amax}	[N]	20000														
Color																	
Inertia in kg.cm² including motor shaft h) Ø24	J_1	[kgcm²]	25.99	19.1	13.83	11.21	9.10	6.87	6.66	4.95	4.85	3.84	4.76	3.79	3.75	7.31	
Ø32			29.37	22.47	17.21	14.58	13.99	11.75	11.55	9.84	9.73	8.73	9.64	8.68	8.63	12.20	
Ø35			29.77	22.86	17.60	14.98	14.49	12.26	12.05	10.35	10.24	9.24	10.15	9.18	9.14	12.71	
Ø38			30.32	23.42	18.15	15.53	14.83	12.59	12.39	10.68	10.58	9.57	10.49	9.52	9.48	13.04	
Ø42			31.52	24.62	19.34	16.74	16.13	13.90	13.69	11.99	11.88	10.87	11.79	10.82	10.78	14.35	
Ø48			31.67	24.77	19.50	16.88	17.41	15.17	14.97	13.26	13.16	12.15	13.07	12.10	12.06	15.62	

SRH planetary gearbox 180 | 3-stage | *Maximum performance in minimal space*

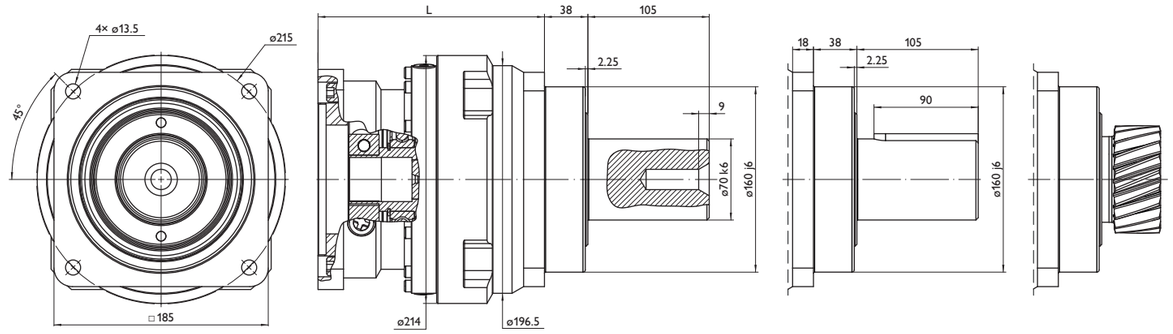

Type SRH: Dimensions for the corresponding output variants

Size 180			1-stage		2-stage								3-stage
Available ratio*	i	unit	4	5.5	16	20	22	28	30.25	38.5	40	55	
Nominal torque S5 a)	T_{2N}	[Nm]	2485	1926	2485	2485	2485	2485	1926	1926	2485	1926	
Acceleration torque S5 b)	T_{2B}	[Nm]	3976	3082	3976	3976	3976	3976	3082	3082	3976	3082	
Nominal input speed S5 c)	n_{1N}	[rpm]	1500	1600	2500	2500	2500	3000	3000	3000	3000	3000	
Maximum input speed S5	n_{1max}	[rpm]	4500	4500	4500	4500	4500	4500	4500	4500	4500	4500	
Nominal torque S1 a)	T_{2N}	[Nm]	1988	1541	1988	1988	1988	1988	1541	1541	1988	1541	Ratio in 3 stage available on request: 64, 80, 88, 100, 110, 121, 137.5, 140, 151.25, 154, 160, 166.375, 192.5, 196, 200, 211.75, 220, 269.5, 275, 280, 302.5, 385, 400, 550
Acceleration torque S1 b)	T_{2B}	[Nm]	3976	3082	3976	3976	3976	3976	3082	3082	3976	3082	
Nominal input speed S1 c)	n_{1N}	[rpm]	1200	1280	2125	2125	2125	2550	2550	2550	2550	2550	
Maximum input speed S1	n_{1max}	[rpm]	3600	3600	3825	3825	3825	3825	3825	3825	3825	3825	
Emergency stop torque d)	T_{2not}	[Nm]	7952	6164	7952	7952	7952	7952	6164	6164	7952	6164	
Efficiency	η	[%]	96										
Lifetime	L_h	[h]	>20000										
Weight	M	[kg]	34		41								
Angular backlash	j_t	[arcmin]	P1≤1min; P3≤3min ; P5≤5min										
Torsionnal rigidity e)	C_{t2}	[Nm/arcmin]	901	828	566	546	544	514	514	498	490	473	
Noise i)	L_{pA}	[dB(A)]	<60										
Max. permitted housing temperature g)	T	[°C]	90										
Protection class			IP65										
Direction of rotation			Same way Input/Output										
Max. radial force on output shaft f)	F_{rmax}	[N]	25000										
Max. axial force on output shaft f)	F_{amax}	[N]	30000										
Color													
Inertia in kg.cm² including motor shaft h) Ø24	J_1	[kgcm²]	22.48	15.6	25.08	18.33	16.66	13.61	16.43	13.47	11.18	11.17	
Ø32			25.86	18.99	28.46	21.71	20.04	16.99	19.81	16.85	14.56	14.54	
Ø35			26.27	19.39	28.85	22.11	20.45	17.39	20.20	17.24	14.96	14.94	
Ø38			26.81	19.95	29.41	22.66	20.99	17.94	20.75	17.79	15.51	15.49	
Ø42			28.01	21.15	30.61	23.87	22.19	19.14	21.96	19.00	16.71	16.70	
Ø48			28.16	21.30	30.76	24.01	22.34	19.29	22.10	19.14	16.86	16.84	

NRHP planetary gearbox 180 | 3-stage | *Precision with high rigidity*

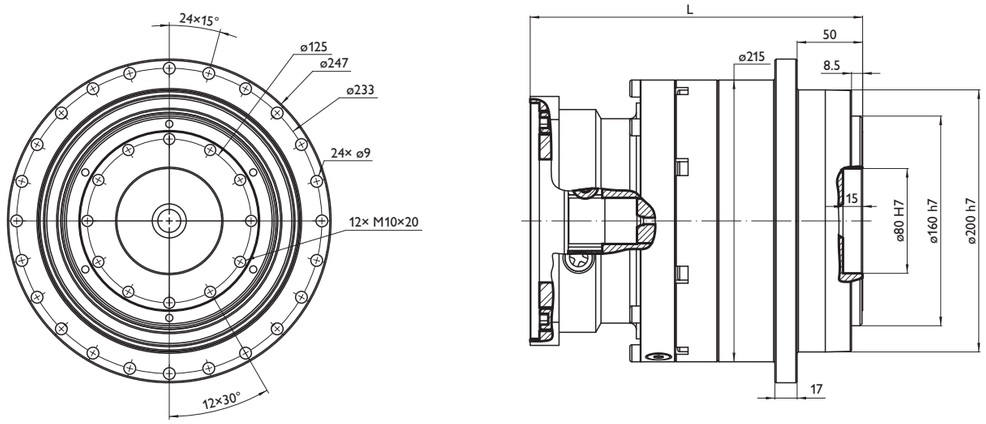

Type NRHP and SRHP 180: Dimensions with the flange output variant

Size 180			1-stage				2-stage										3-stage
Available ratio*	i	unit	4	5	7	10	16	20	25	28	35	40	49	50	70	100	
Nominal torque S5 a)	T_{2N}	[Nm]	1401	1614	1281	798	1625	1625	1614	1625	1614	1625	1281	1614	1281	798	
Acceleration torque S5 b)	T_{2B}	[Nm]	2242	2583	2049	1277	2600	2600	2583	2600	2583	2600	2049	2583	2049	1277	
Nominal input speed S5 c)	n_{1N}	[rpm]	1500	1600	2200	2200	2600	2600	2700	3000	3000	3000	3000	3000	3000	3000	
Maximum input speed S5	n_{1max}	[rpm]	4500	4500	4500	4500	4500	4500	4500	4500	4500	4500	4500	4500	4500	4500	
Nominal torque S1 a)	T_{2N}	[Nm]	1191	1372	1089	678	1463	1463	1453	1463	1453	1463	1153	1453	1153	718	
Acceleration torque S1 b)	T_{2B}	[Nm]	2242	2583	2049	1277	2600	2600	2583	2600	2583	2600	2049	2583	2049	1277	Ratio in 3 stage available on request: 64, 80, 100, 112, 125, 140, 154, 160, 175, 200, 245, 250, 280, 343, 350, 400, 490, 500, 700, 1000
Nominal input speed S1 c)	n_{1N}	[rpm]	1350	1440	1980	1980	2340	2340	2430	2700	2700	2700	2700	2700	2700	2700	
Maximum input speed S1	n_{1max}	[rpm]	4050	4050	4050	4050	4050	4050	4050	4050	4050	4050	4050	4050	4050	4050	
Emergency stop torque d)	T_{2not}	[Nm]	4484	5166	4098	2554	5200	5200	5166	5200	5166	5200	4098	5166	4098	2554	
Efficiency	η	[%]	98														
Lifetime	L_h	[h]	>20000														
Weight	M	[kg]	33	43	41		51										
Angular backlash	j_t	[arcmin]	P1≤1min; P3≤3min ; P5≤5min														
Torsionnal rigidity e)	C_{t2}	[Nm/arcmin]	1238	1118	956	852	716	677	672	617	585	575	550	550	546	520	
Noise i)	L_{pA}	[dB(A)]	<60														
Max. permitted housing temperature g)	T	[°C]	90														
Protection class			IP65														
Direction of rotation			Same way Input/Output														
Max. radial force on output shaft f)	F_{rmax}	[N]	30000														
Max. axial force on output shaft f)	F_{amax}	[N]	25000														
Color																	
Inertia in kg.cm² including motor shaft h) Ø24	J_1	[kgcm²]	52.26	36.2	22.75	15.66	9.75	7.92	7.34	5.49	5.19	4.10	4.93	3.96	3.83	3.76	
Ø32			55.64	39.61	26.13	19.04	14.63	12.81	12.22	10.37	10.07	8.99	9.82	8.84	8.72	8.65	
Ø35			56.04	40.00	26.52	19.44	15.14	13.31	12.73	10.88	10.59	9.50	10.33	9.35	9.23	9.16	
Ø38			56.59	40.55	27.08	19.99	15.49	13.65	13.06	11.22	10.92	9.84	10.67	9.69	9.56	9.49	
Ø42			57.79	41.76	28.28	21.20	16.78	14.95	14.37	12.52	12.23	11.14	11.97	10.99	10.87	10.80	
Ø48			57.94	41.91	28.43	21.34	18.06	16.23	15.64	13.80	13.50	12.42	13.25	12.27	12.14	12.07	

SRHP Planetengetriebe 180 | 3-stufig | *Maximum power density and stability*

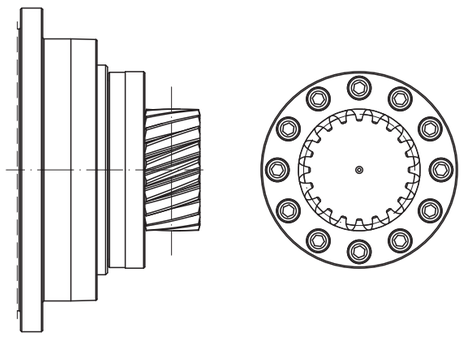

Dimensions of the pinion output variant

Key to tables pages 6 to 9

a) Nominal output torque when operating at n1N
b) 1000 cycles per hour max
c) Valid for an ambient temperature of 20°C and T2N. At higher temperatures, please reduce speed
d) Valid for 1000 times during the gearbox life
e) Valid for an input Ø of 48 mm in 1 stage and 38 mm in 2 and 3 stage
f) Valid at the middle of shaft, output gear, output flange
g) For the other temperatures, please contact us
h) Value including the motor output shaft. For the others motor output shaft Ø, please contact us.
i) With n1N=3000 rpm no load

Size 180			1-stage		2-stage								3-stage
Available ratio*	i	unit	4	5.5	16	20	22	28	30.25	38.5	40	55	
Nominal torque S5 a)	T_{2N}	[Nm]	2485	1926	2485	2485	2485	2485	1926	1926	2485	1926	
Acceleration torque S5 b)	T_{2B}	[Nm]	3976	3082	3976	3976	3976	3976	3082	3082	3976	3082	
Nominal input speed S5 c)	n_{1N}	[rpm]	1500	1600	2500	2500	2500	3000	3000	3000	3000	3000	
Maximum input speed S5	n_{1max}	[rpm]	4500	4500	4500	4500	4500	4500	4500	4500	4500	4500	
Nominal torque S1 a)	T_{2N}	[Nm]	1988	1541	1988	1988	1988	1988	1541	1541	1988	1541	
Acceleration torque S1 b)	T_{2B}	[Nm]	3976	3082	3976	3976	3976	3976	3082	3082	3976	3082	Ratio in 3 stage available on request: 64, 80, 88, 100, 110, 121, 137.5, 140, 151.25, 154, 160, 166.375, 192.5, 196, 200, 211.75, 220, 269.5, 275, 280, 302.5, 385, 400, 550
Nominal input speed S1 c)	n_{1N}	[rpm]	1200	1280	2125	2125	2125	2550	2550	2550	2550	2550	
Maximum input speed S1	n_{1max}	[rpm]	3600	3600	3825	3825	3825	3825	3825	3825	3825	3825	
Emergency stop torque d)	T_{2not}	[Nm]	7952	6164	7952	7952	7952	7952	6164	6164	7952	6164	
Efficiency	η	[%]	98										
Lifetime	L_h	[h]	>20000										
Weight	M	[kg]	34		41								
Angular backlash	j_t	[arcmin]	P1≤1min; P3≤3min ; P5≤5min										
Torsionnal rigidity e)	C_{t2}	[Nm/arcmin]	1549	1347	895	846	841	772	772	731	719	683	
Noise i)	L_{pA}	[dB(A)]	<60										
Max. permitted housing temperature g)	T	[°C]	90										
Protection class			IP65										
Direction of rotation			Same way Input/Output										
Max. radial force on output shaft f)	F_{rmax}	[N]	30000										
Max. axial force on output shaft f)	F_{amax}	[N]	25000										
Color													
Inertia in kg.cm² including motor shaft h) Ø24	J_1	[kgcm²]	47.02	28.6	26.61	19.32	17.47	14.11	16.86	13.73	11.43	11.41	
Ø32			50.39	31.99	29.99	22.69	20.85	17.49	20.24	17.11	14.81	14.79	
Ø35			50.79	32.39	30.39	23.09	21.25	17.89	20.63	17.51	15.20	15.19	
Ø38			51.34	32.94	30.94	23.64	21.80	18.44	21.18	18.06	15.75	15.74	
Ø42			52.55	34.15	32.14	24.85	23.00	19.64	22.39	19.26	16.96	16.94	
Ø48			52.70	34.30	32.29	24.99	23.15	19.79	22.53	19.41	17.10	17.09	

Application examples of planetary gearboxes

Scan QR code for application examples

The roboSpeed and roboBeam demonstrate the use of our 180 gearboxes in practice – from dynamic handling to precise positioning of heavy axes.

Dynamics and precision – drive solutions for roboSpeed

With the NRH180 and SRH80, roboSpeed offers the right solution for every axis – whether highly dynamic, compact or specialized.
The gearboxes are powerful, adaptable and designed for continuous operation. Precision and efficiency – exactly when it counts.

Gearbox type: NRH180
Description: W-Axis on roboSpeed
Features: high dynamics
Advantages on this application:
- Max. Speed 4250 rpm
- Max. Acc. torque 1130 Nm

Gearbox type: NRH180
Description: V-Axis on roboSpeed
Features: special output
Advantages on this application:
- Max speed: 2848 rpm.
- Max acceleration torque 1635 Nm

Gearbox type: SRH80
Description: D3-Axis on roboSpeed
Features: high torque, small sized
Advantages on this application:
- Max. Speed 4000 rpm
- Max. Acc. torque 200 Nm

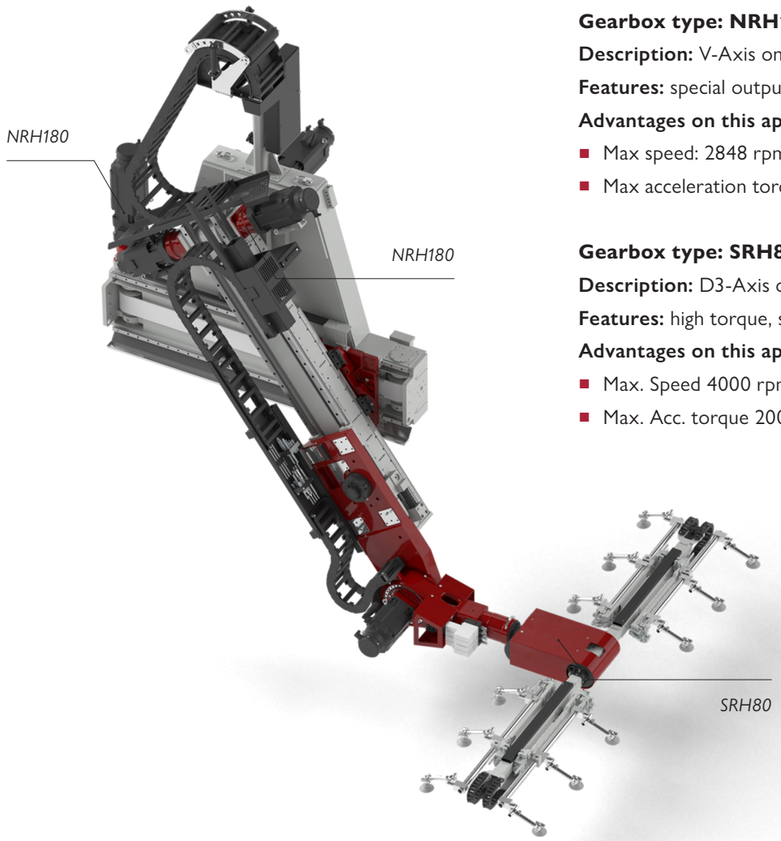

Power and rigidity – gearbox performance for roboBeam

In the roboBeam, the NRHP180 and NRH180 ensure precise power transmission for demanding axes. Whether high rigidity, optimized bearings or vertical alignment – these gearboxes offer maximum reliability and performance in continuous operation.

Gearbox type: NRHP180
Description: Yx-Axis
Features: high torque, breather
Advantages on this application:
- Max. Speed 3850 rpm
- Max. Acc. torque 1095 Nm

Gearbox type: NRH180
Description: Yxx-Axis
Features: high dynamics
Advantages on this application:
- Max. Speed 2000 rpm
- Max. Acc. torque 675 Nm

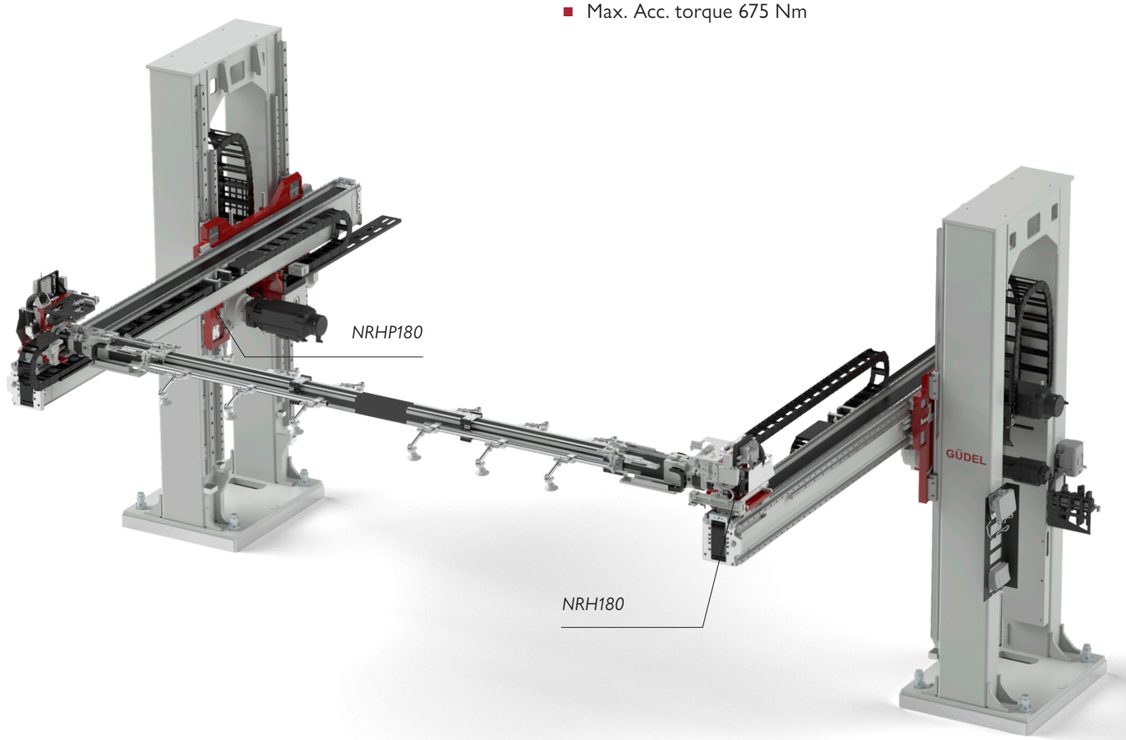

GÜDEL

Swiss automation since 1954

Engineered and made in Switzerland
We have stood for the highest quality and reliability for over 70 years.

Intelligent and complete solutions
From individual components to complete automation solutions – everything from one single source.

Highest precision and maximum accuracy
In-house manufactured racks, pinions and gearboxes for maximum precision – that is in our DNA.

Transporting heavy loads over long distances
Market leader in moving loads of up to 3 tons over 100 meters.

Future-oriented with tradition
Durable products for sustainable efficiency – proven and tested over many years.

Global presence, local expertise
Approximately at over 20 locations with around 1000 employees – working for you worldwide.

Güdel Group AG
Gaswerkstrasse 26
4900 Langenthal
Switzerland
+41 62 916 91 91
info@ch.gudel.com

gudel.com/pg
automation on track

EN | 10.25 | 10521925